# KAWASAKI ER-6N '06-'16

## MOUNTING INSTRUCTIONS

**REF 20134N** — **TAPA ALTERNADOR / ALTERNATOR COVER**

1 Person

1 hour

EASY

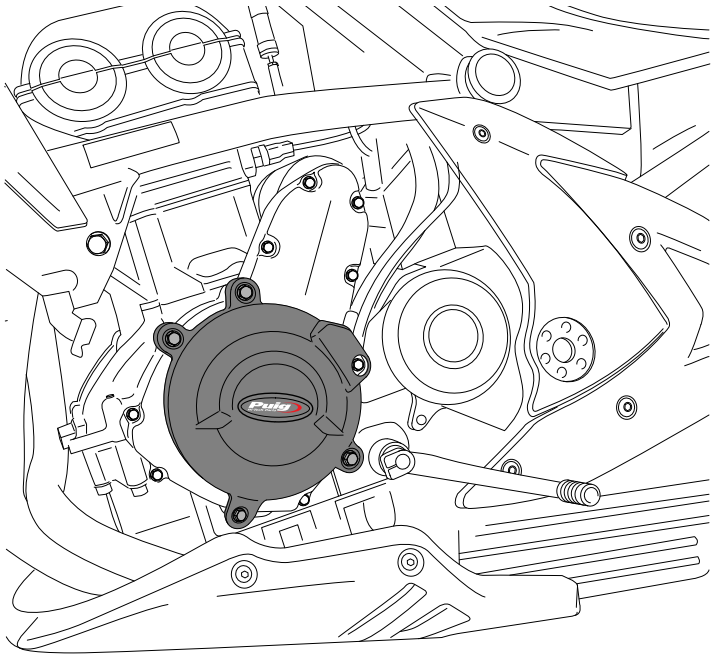

| ID. | PIEZA / PART | DESCRIPCIÓN | DESCRIPTION | QTY. | REF.: |
|---|---|---|---|---|---|
| 1 | 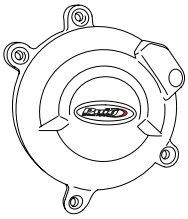 | Tapa alternador | Alternator cover | 1 | CONJUNTO--20134N |
| 2 | 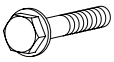 | Tornillo M6x40 DIN6921 | DIN6921 M6x40 screw | 3 | - |
| 3 | 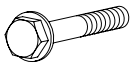 | Tornillo M6x50 DIN6921 | DIN6921 M6x50 screw | 1 | - |

**CONSULTAR EN NUESTRA PAGINA WEB LA DISPONIBILIDAD DEL VIDEO DE MONTAJE DE ESTA REFERENCIA.**
**CONSULT OUR WEBSITE THE VIDEO MOUNT AVAILABILITY OF THIS REFERENCE.**



*Created by: www.rrdisseny.cat*

# KAWASAKI ER-6N '06-'16

**REF 20134N**

**INSTRUCCIONES DE MONTAJE - MOUNTING INSTRUCTIONS - MONTAGEANLEITUNG**

## 1

**DISASSEMBLY**
**DESMONTAJE**

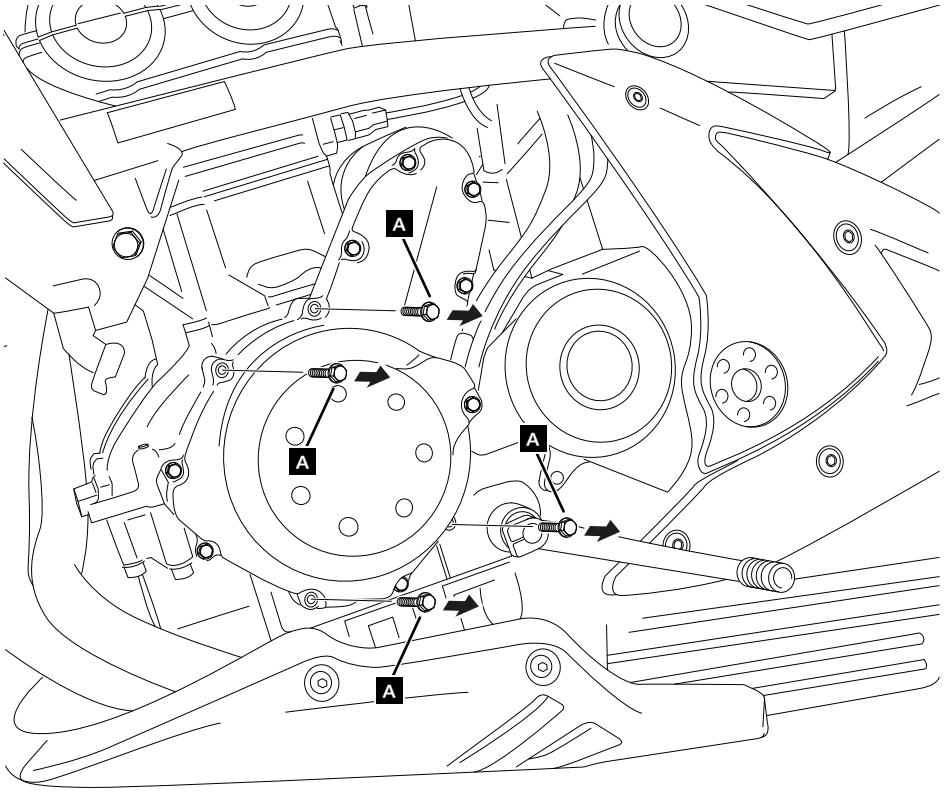


A Tornillería original
Original screws

## 2

**ASSEMBLY**
**MONTAJE**

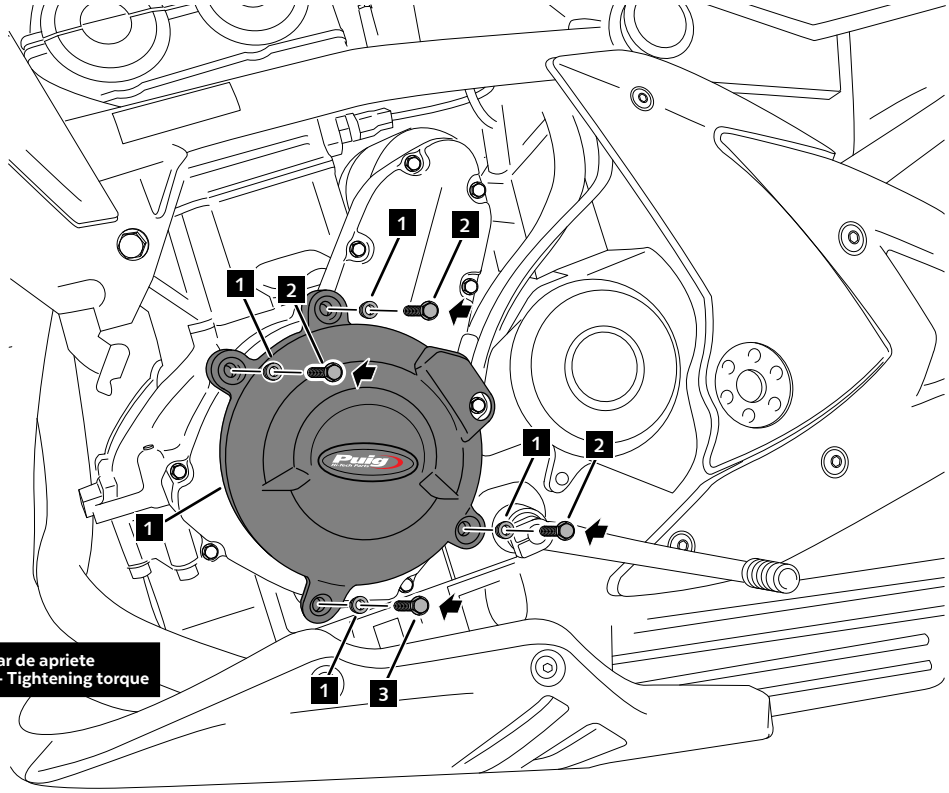


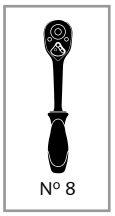


2-3 12 Nm - Par de apriete
8.85 ft lb - Tightening torque



*Created by: www.rrdisseny.cat*

# KAWASAKI ER-6N '06-'16

## MOUNTING INSTRUCTIONS

## REF 20134N — TAPA EMGRAGUE / CLUTCH COVER

1 Person

1 hour

EASY

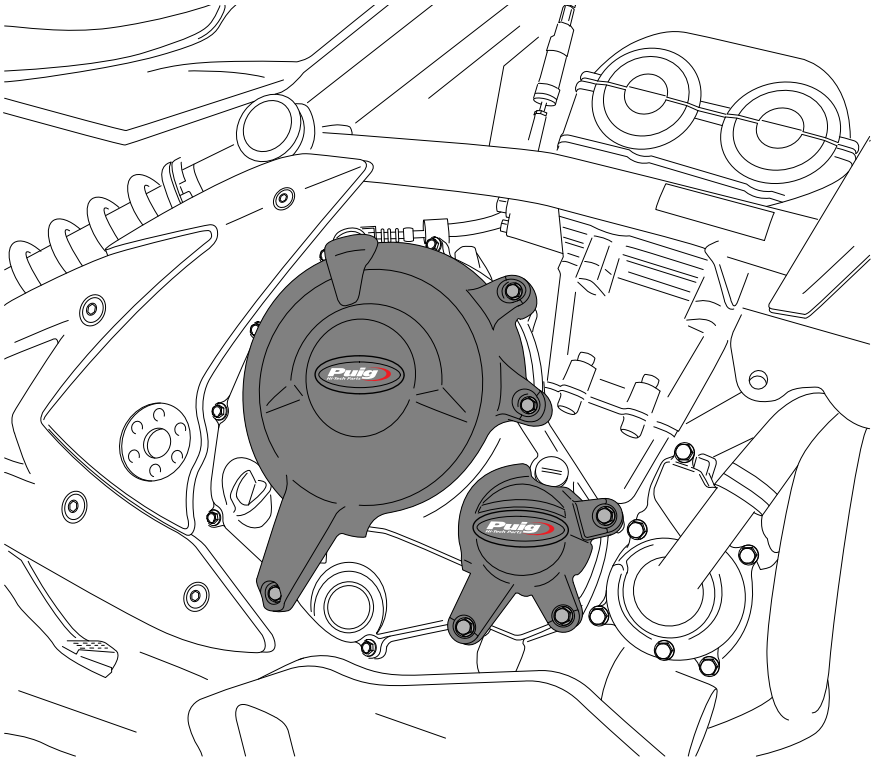

| ID. | PIEZA / PART | DESCRIPCIÓN | DESCRIPTION | QTY. | REF.: |
|---|---|---|---|---|---|
| 1 | | Tapa embrague 1 | Clutch cover 1 | 1 | CONJUNTO--20134N |
| 2 | 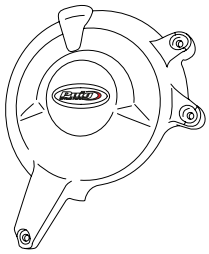 | Tapa embrague 2 | Clutch cover 2 | 1 | CONJUNTO--20134N |
| 3 | 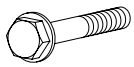 | Tornillo M6x40 DIN6921 | M6x40 DIN6921 screw | 6 | - |



Created by: www.rrdisseny.cat

# KAWASAKI ER-6N '06-'16

**REF 20134N**

**INSTRUCCIONES DE MONTAJE - MOUNTING INSTRUCTIONS - MONTAGEANLEITUNG**

## 1

**DISASSEMBLY**
**DESMONTAJE**

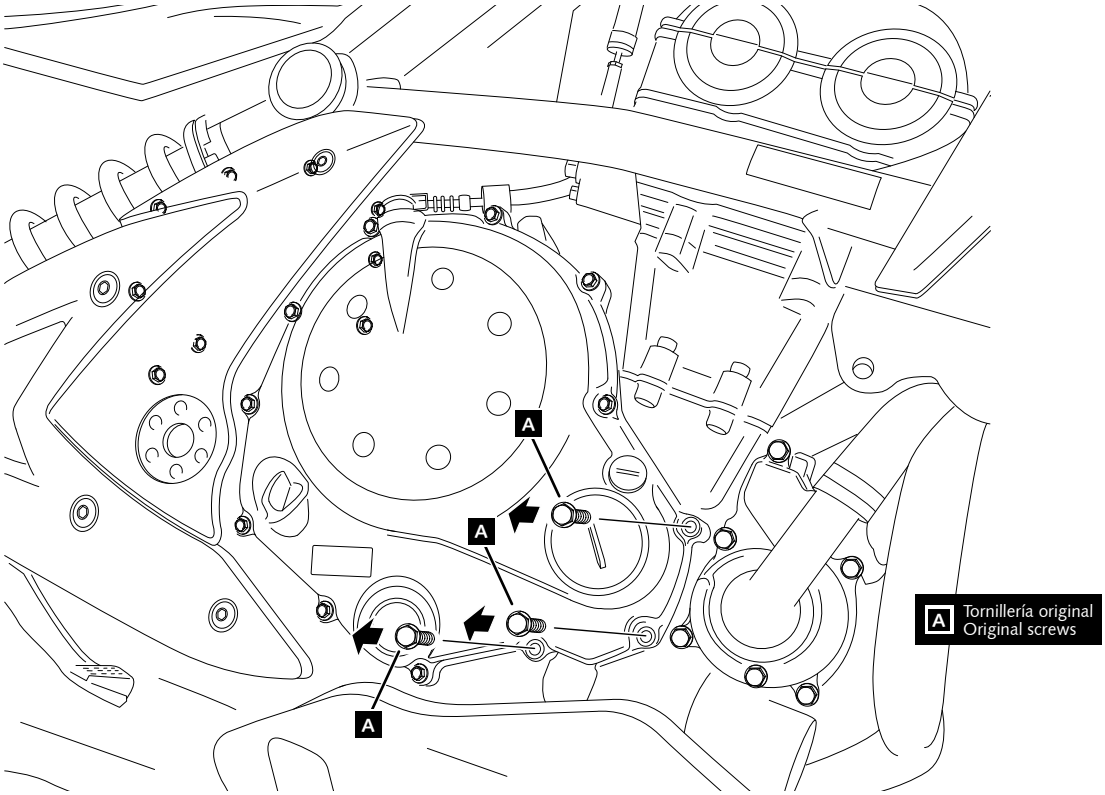


## 2

**ASSEMBLY**
**MONTAJE**

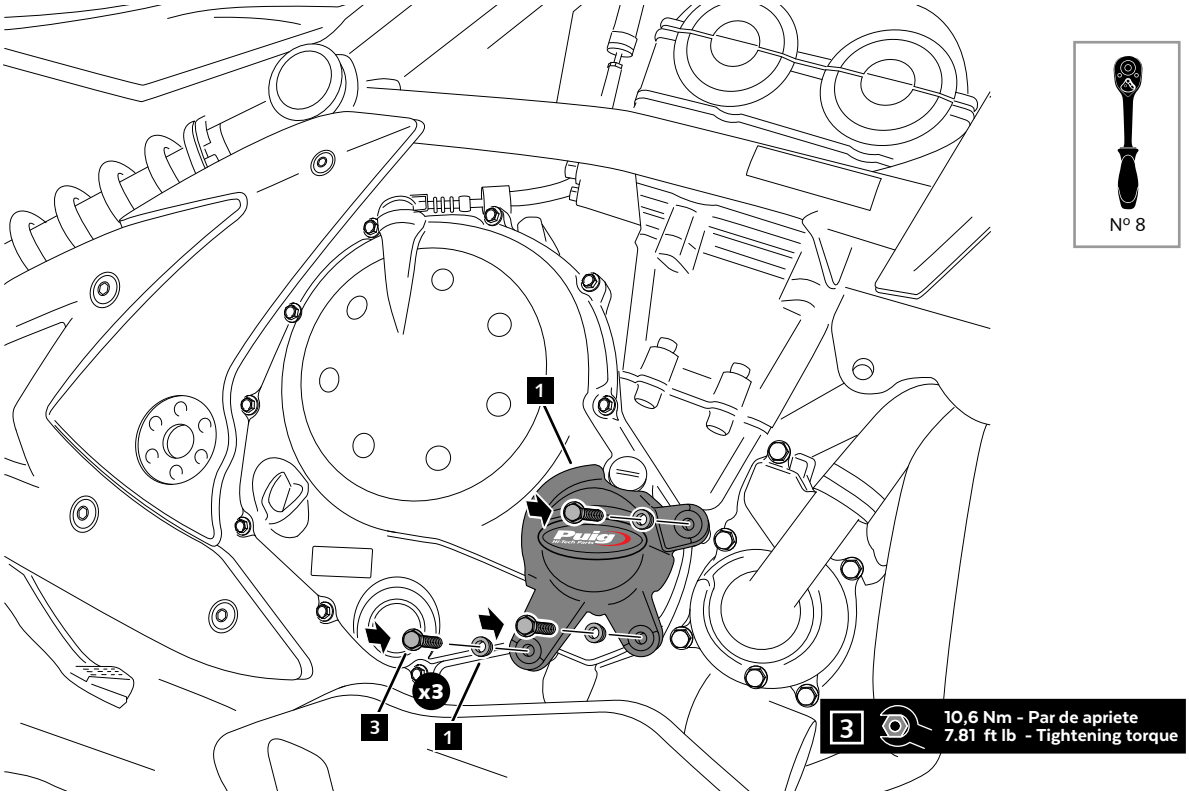




*Created by: www.rrdisseny.cat*

# KAWASAKI ER-6N '06-'16

**REF 20134N**

**INSTRUCCIONES DE MONTAJE - MOUNTING INSTRUCTIONS - MONTAGEANLEITUNG**

## 3

**DISASSEMBLY**
**DESMONTAJE**

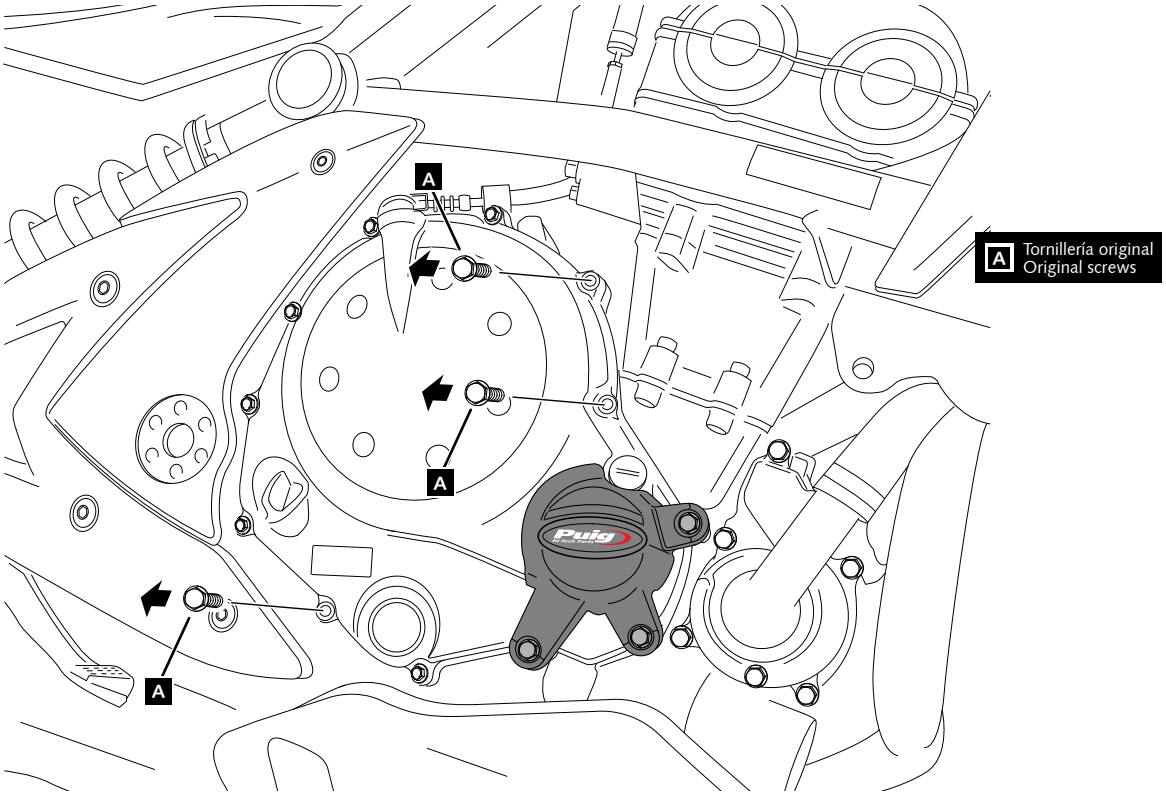


## 4

**ASSEMBLY**
**MONTAJE**

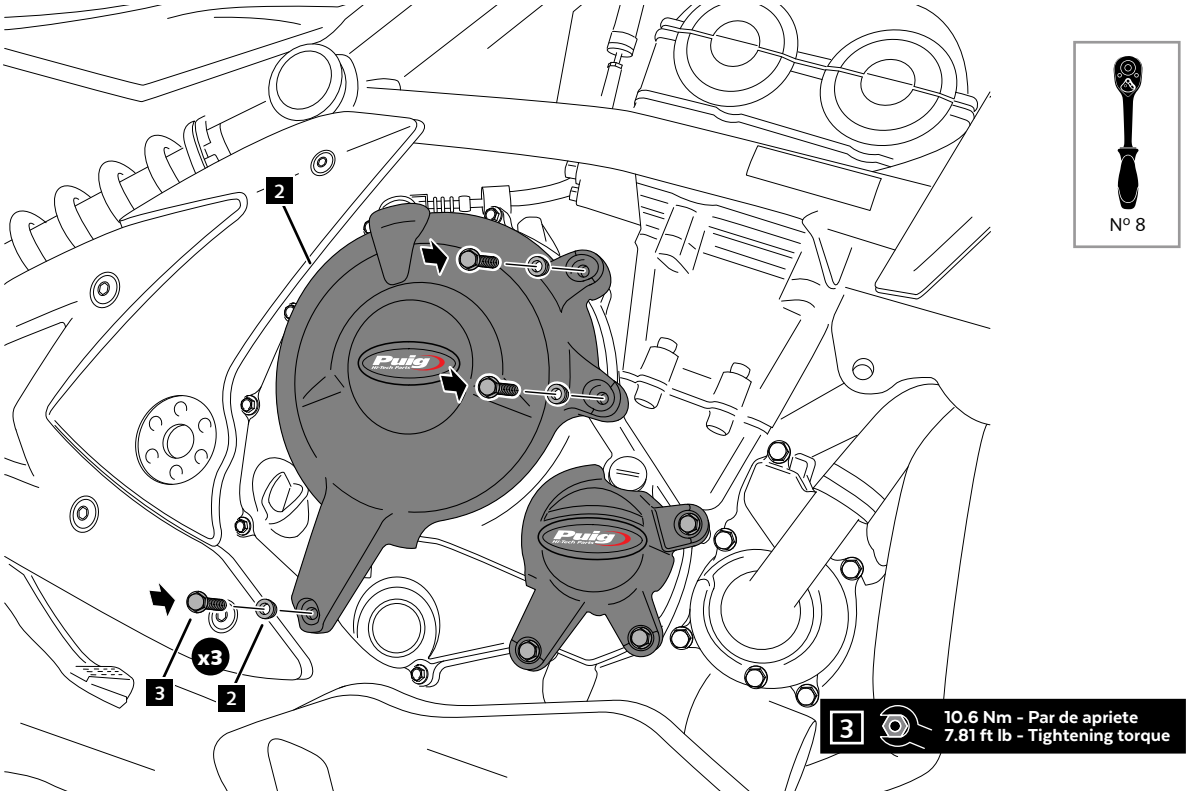




*Created by: www.rrdisseny.cat*