MOTOPLASTIC, S.A. Tel. +34 93 849 06 33
Pg. de la Ribera, 29 - 08403 Granollers (Barcelona) SPAIN
info@puig.tv info@puigusa.com
www.puig.tv **www.puigusa.com**

CÚPULA TOURING PARA - TOURING SCREEN FOR - TOURENSCHEIBE FÜR

BMW S1000XR '15-

Ref.: 7619

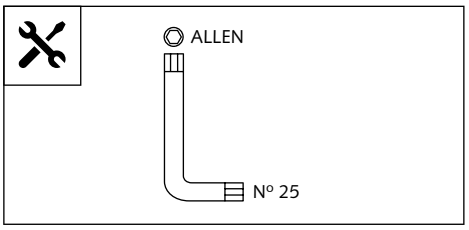

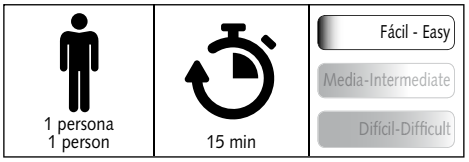

ID	PIEZA / PART	DESCRIPCIÓN	DESCRIPTION	QTY	REF.
1	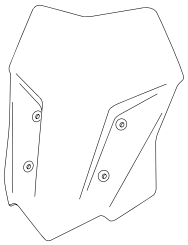	Cúpula Touring	Touring screen	1	7619H/W/F/NM3

Created by: www.ciandisseny.com

MOTOPLASTIC, S.A. Tel. +34 93 849 06 33
Pg. de la Ribera, 29 - 08403 Granollers (Barcelona) SPAIN
info@puig.tv info@puigusa.com
www.puig.tv **www.puigusa.com**

CÚPULA TOURING PARA - TOURING SCREEN FOR - TOURENSCHEIBE FÜR

BMW S1000XR '15-

INSTRUCCIONES DE MONTAJE - MOUNTING INSTRUCTIONS - MONTAGEANLEITUNG

DESMONTAJE
DISASSEMBLY

1

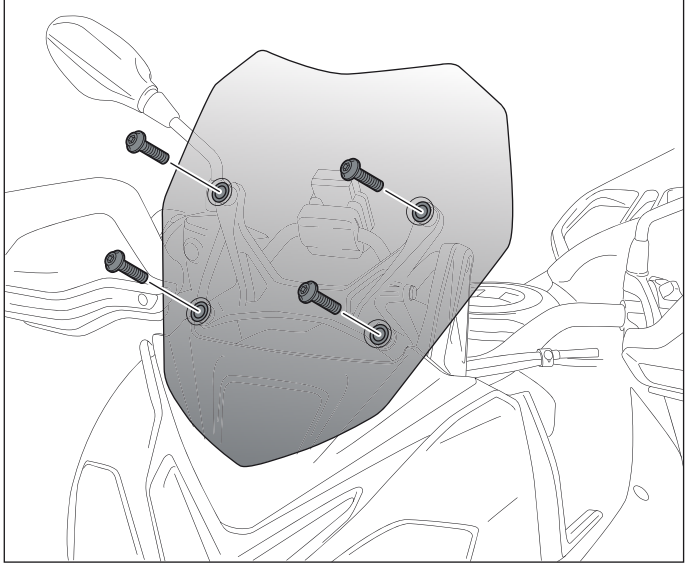

DESMONTAJE
DISASSEMBLY

2

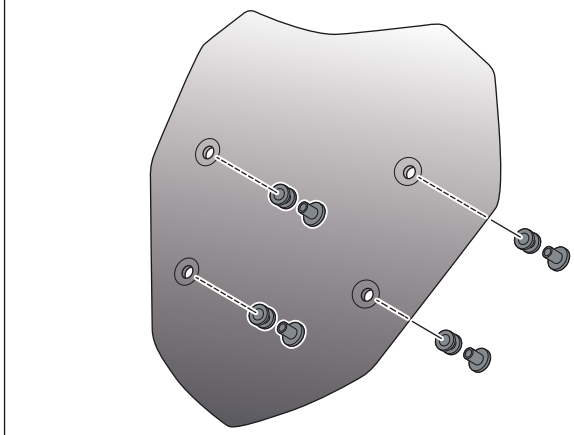

MONTAJE
ASSEMBLY

3

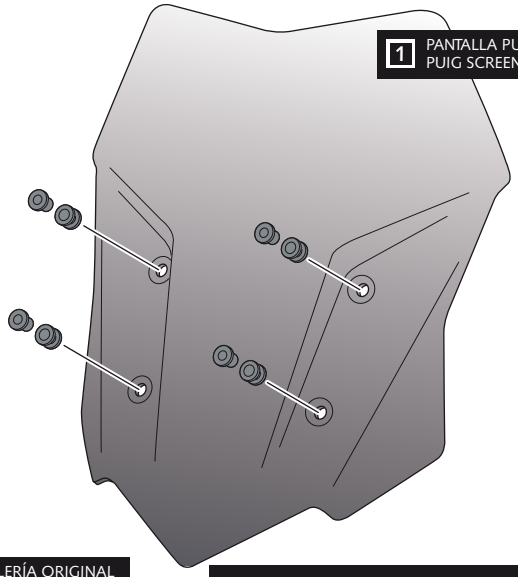

TORNILLERÍA ORIGINAL
ORIGINAL SCREWS

PONER LOS CASQUILLOS POR LA CARA EXTERIOR / PUT THE BUSHES FROM THE OUTSIDE FACE

MONTAJE
ASSEMBLY

4

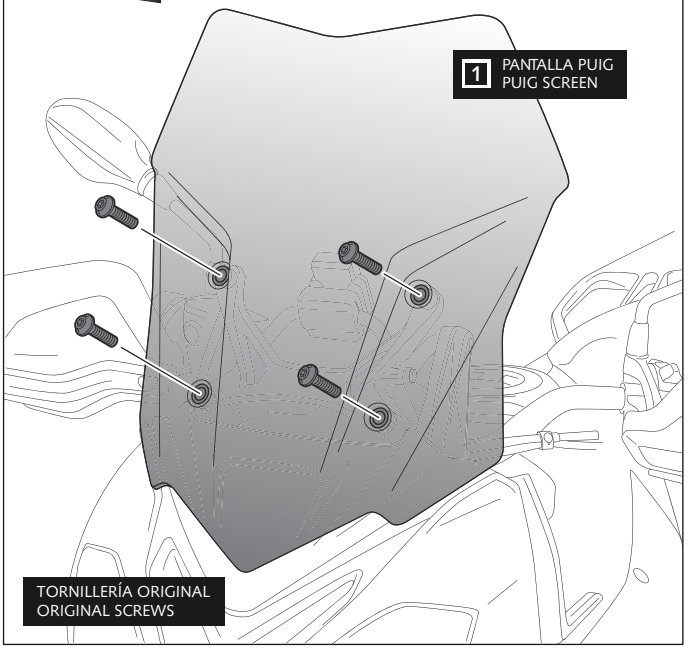

TORNILLERÍA ORIGINAL
ORIGINAL SCREWS

Created by: www.ciandisseny.com

MOTOPLASTIC, S.A. Tel. +34 93 849 06 33
Pg. de la Ribera, 29 - 08403 Granollers (Barcelona) SPAIN
info@puig.tv info@puigusa.com
www.puig.tv **www.puigusa.com**

VISERA MULTIREGULABLE
MULTI-ADJUSTABLE VISOR

CÚPULA TIPO
TYPE WINDSCREEN **A**

CÚPULA TIPO
TYPE WINDSCREEN **B**

CÚPULA TIPO
TYPE WINDSCREEN **C**

Ref.: 6007

Ref.: 5852

Ref.: 5853

Ahumado/Smoke

Transparente/Clear

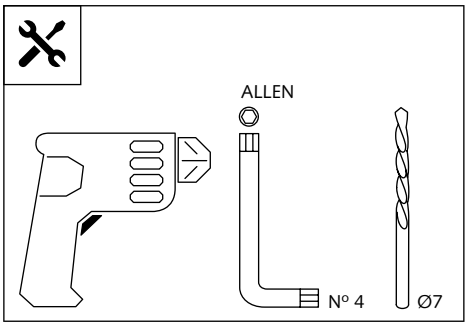

1 persona
1 person

15 min

Fácil - Easy
Media-Intermediate
Difícil-Difficult

Nota/Note:
Si la visera se suministra con la cúpula Puig, no será necesario realizar los agujeros por que ya vienen incorporados.
If the visor is supplied along with the windscreen, the windscreen will come factory-drilled so no drilling is necessary.

ID.	PIEZA / PART	DESCRIPCIÓN	DESCRIPTION	QTY.
1	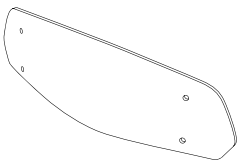	Visera	Visor	1
2		Plantilla	Template	1
3		Mecanismo multiregulable	Multi-adjustable mechanism	2
4		Tapeta	Cap	4
5		Tornillo rosca plástico M6x12	Plastic thread fastener M6x12	8

Created by: www.ciandisseny.com

MOTOPLASTIC, S.A. Tel. +34 93 849 06 33
Pg. de la Ribera, 29 - 08403 Granollers (Barcelona) SPAIN
info@puig.tv info@puigusa.com
www.puig.tv **www.puigusa.com**

VISERA MULTIREGULABLE
MULTI-ADJUSTABLE VISOR

INSTRUCCIONES DE MONTAJE - MOUNTING INSTRUCTIONS - MONTAGEANLEITUNG

TIPO/TYPE **A** - TIPO/TYPE **A** - TIPO/TYPE **A**

1

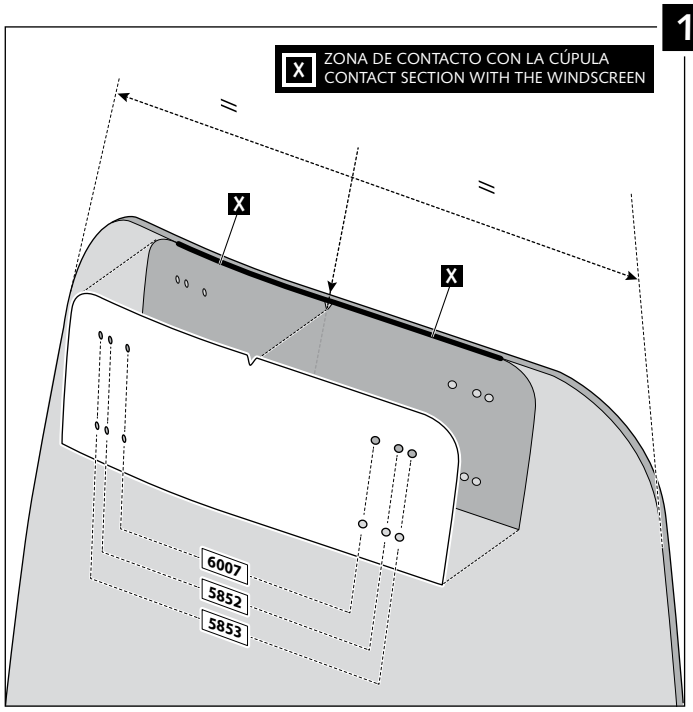

2

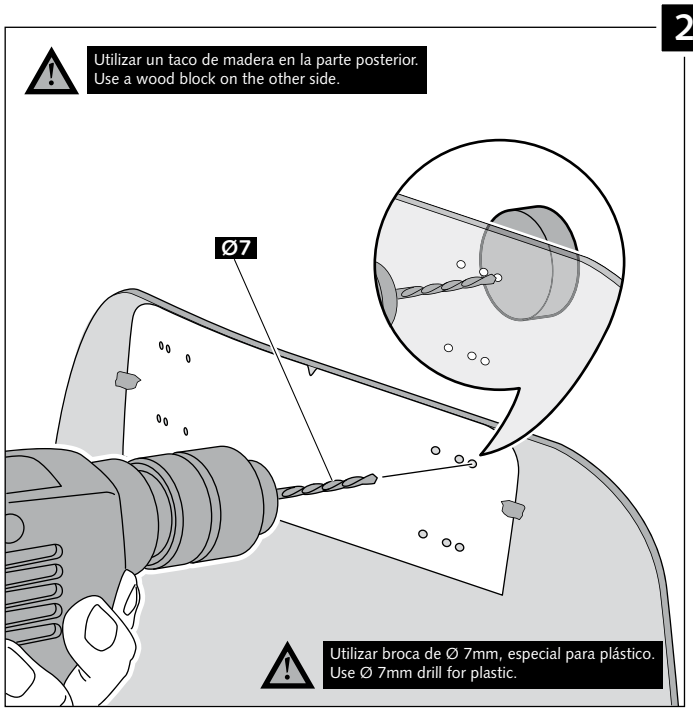

3

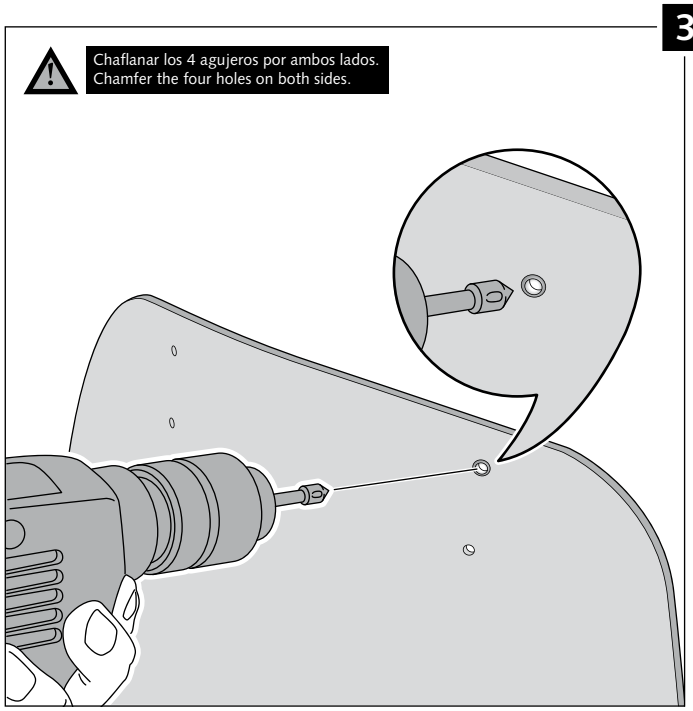

4

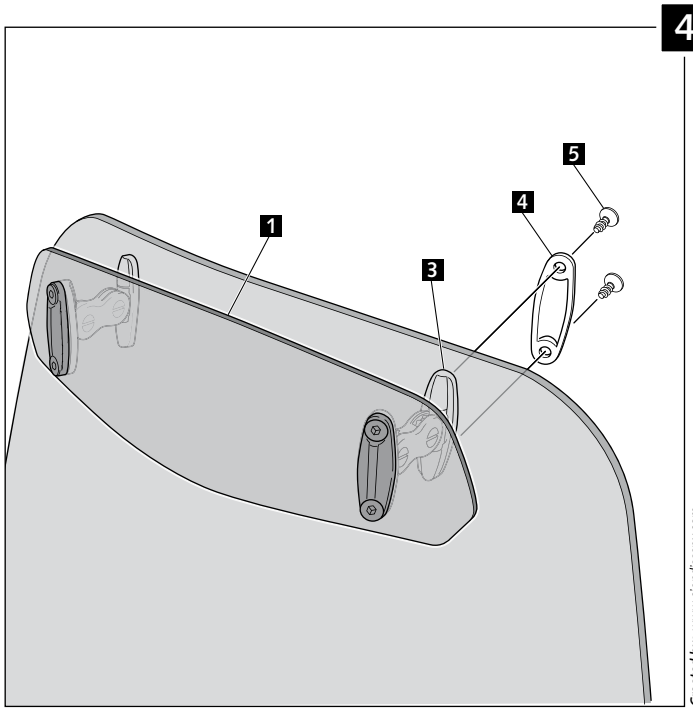

Created by: www.ciandisseny.com

MOTOPLASTIC, S.A. Tel. +34 93 849 06 33
Pg. de la Ribera, 29 - 08403 Granollers (Barcelona) SPAIN
info@puig.tv info@puigusa.com
www.puig.tv **www.puigusa.com**

VISERA MULTIREGULABLE
MULTI-ADJUSTABLE VISOR

INSTRUCCIONES DE MONTAJE - MOUNTING INSTRUCTIONS - MONTAGEANLEITUNG

TIPO/TYPE **B** - TIPO/TYPE **B** - TIPO/TYPE **B**

1

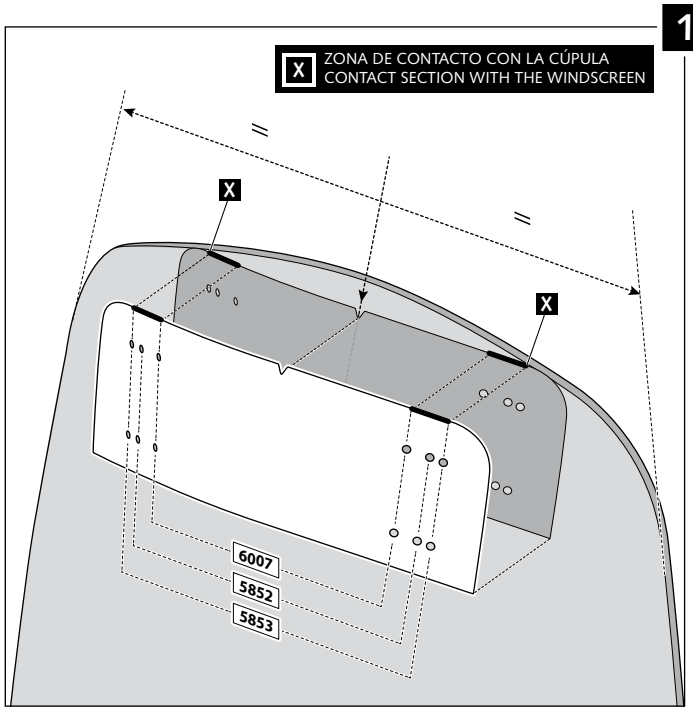

2

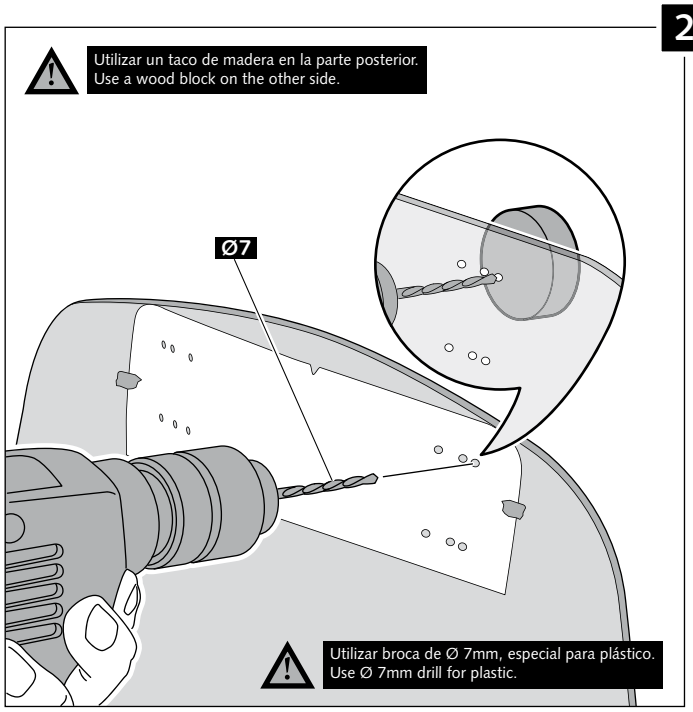

3

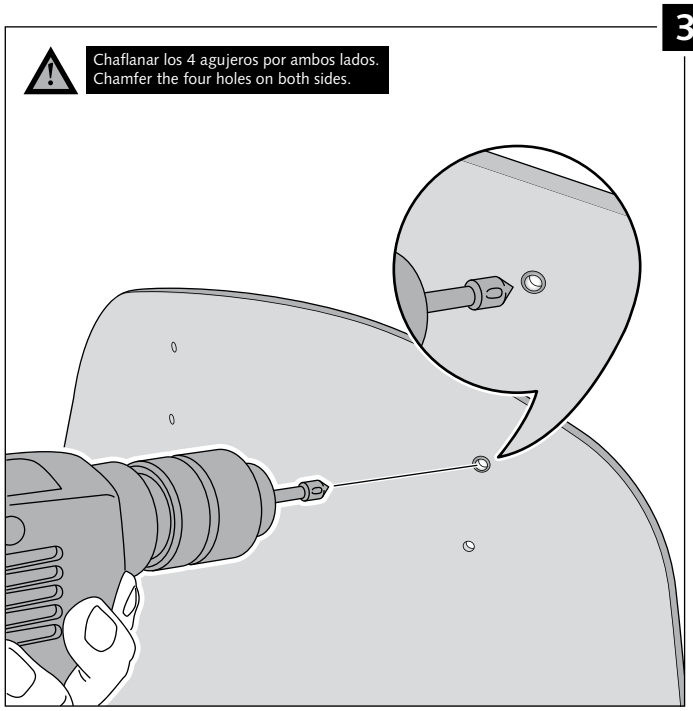

4

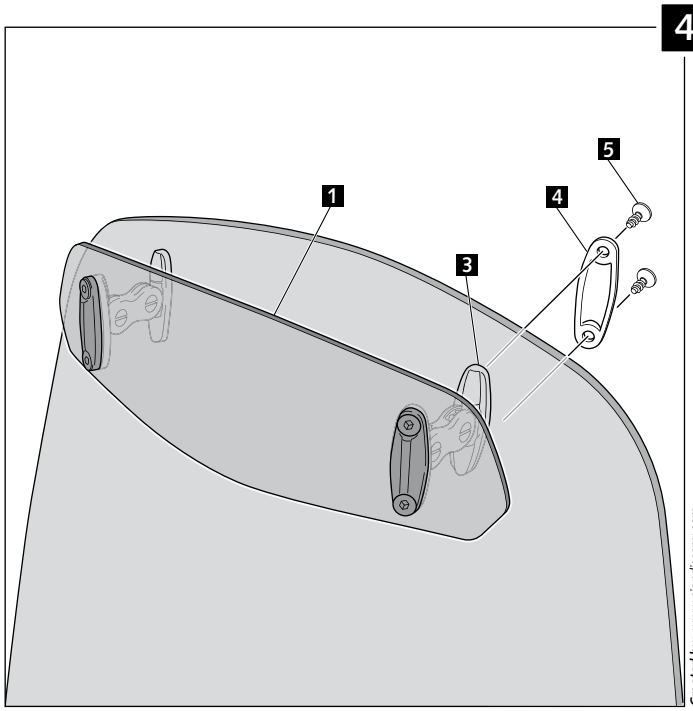

Created by: www.ciandisseny.com

MOTOPLASTIC, S.A. Tel. +34 93 849 06 33
Pg. de la Ribera, 29 - 08403 Granollers (Barcelona) SPAIN
info@puig.tv info@puigusa.com
www.puig.tv **www.puigusa.com**

VISERA MULTIREGULABLE
MULTI-ADJUSTABLE VISOR

INSTRUCCIONES DE MONTAJE - MOUNTING INSTRUCTIONS - MONTAGEANLEITUNG

TIPO/TYPE **C** - TIPO/TYPE **C** - TIPO/TYPE **C**

1

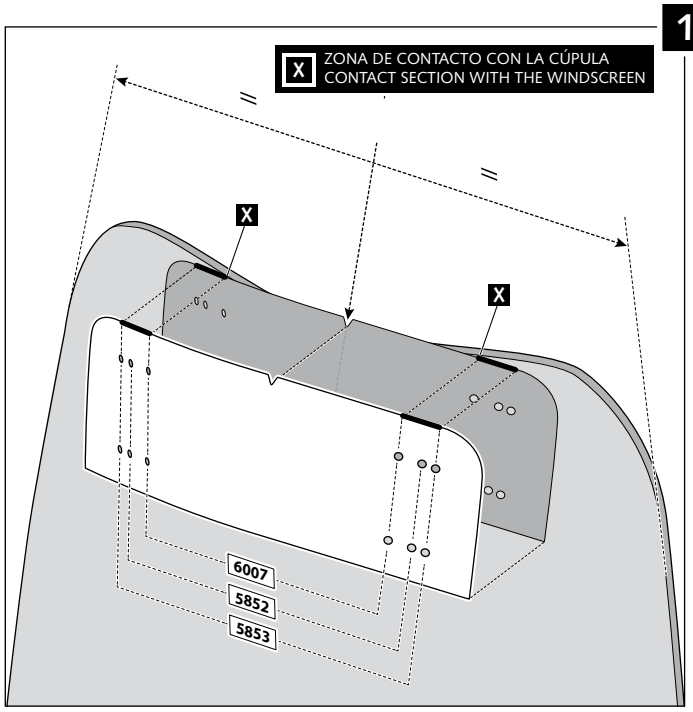

2

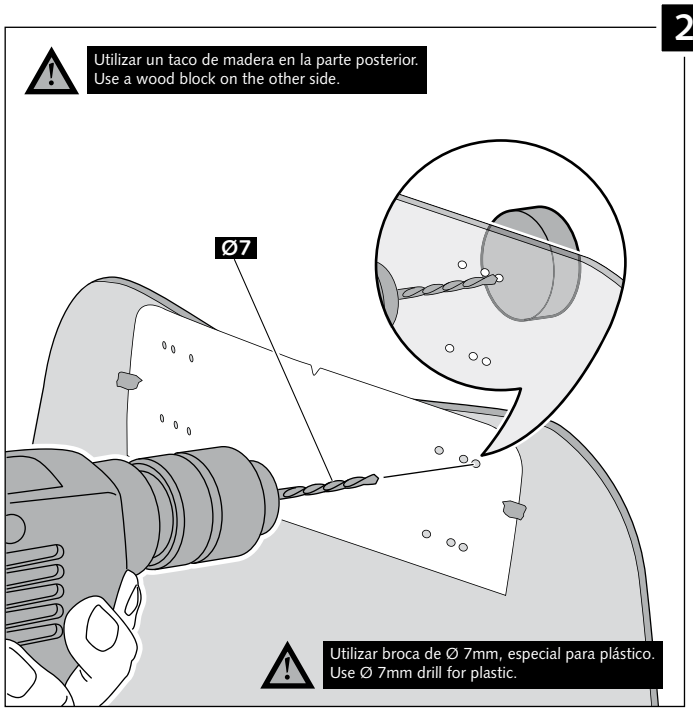

3

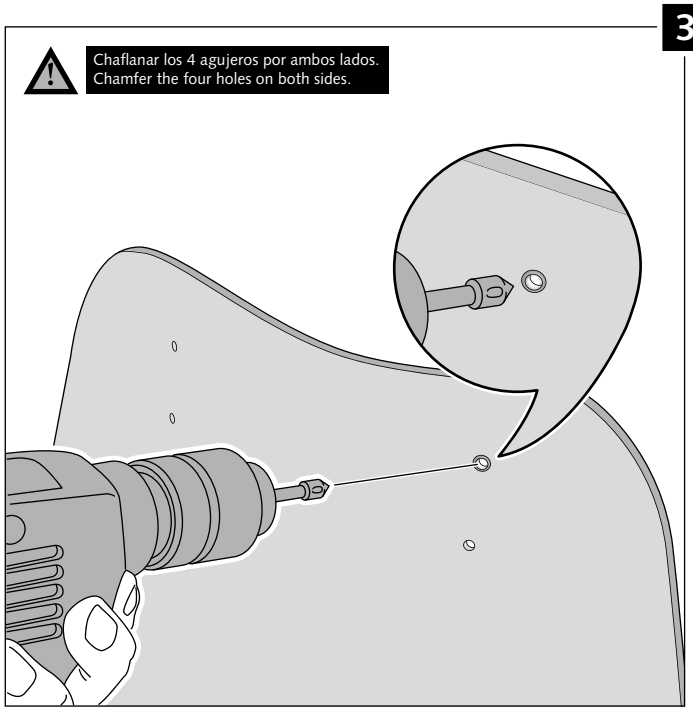

4

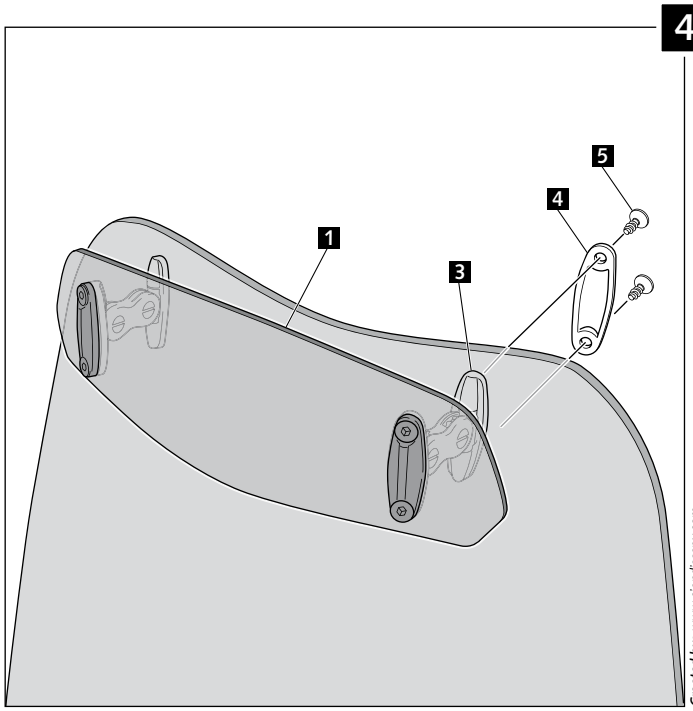

Created by: www.ciandisseny.com